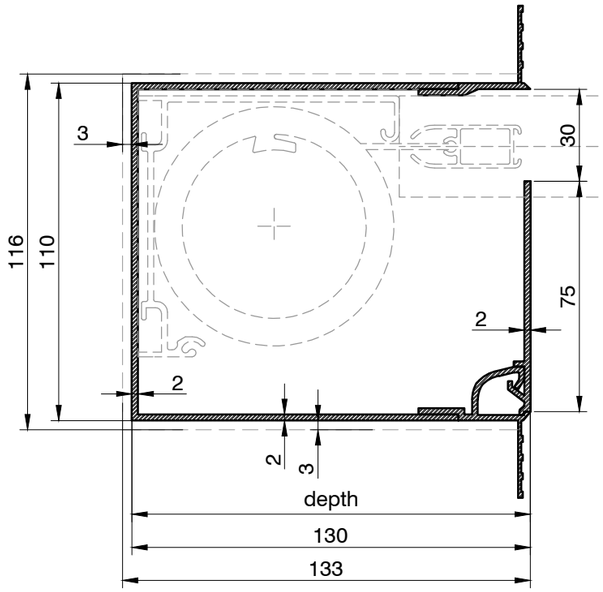

Head Box
R110x130 S

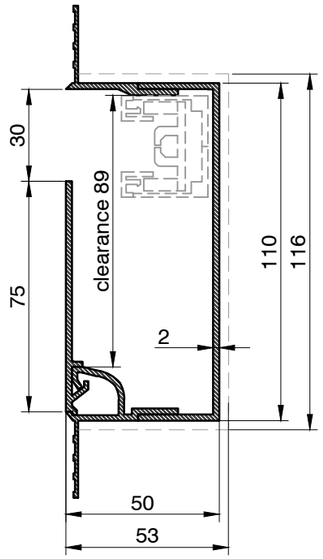

Side Box
R110x50 S

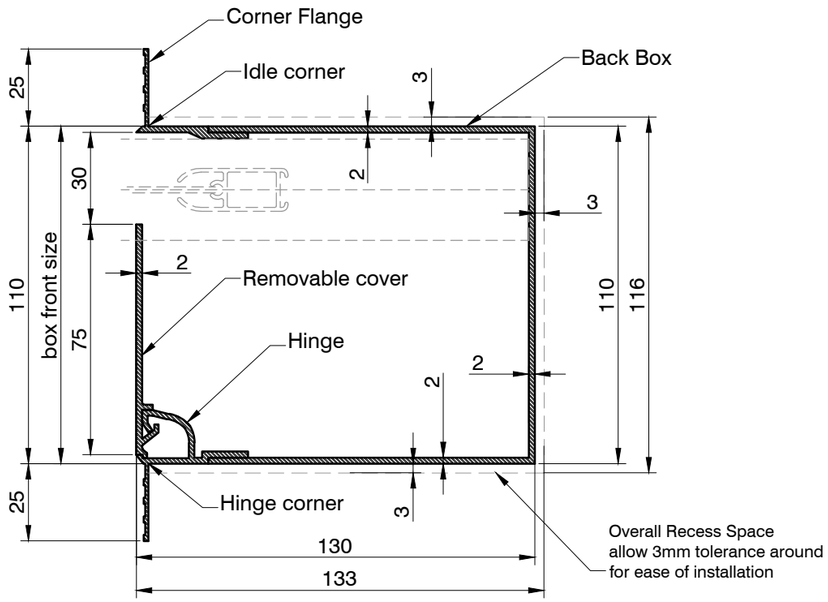

1:2 scale

Hembar Box
R110x130 S

Product	Blindspace R110x130
Description	Recessed aluminium boxes and covers designed to conceal rooflights blinds.
Material	Anodized Aluminium, grade: front plate: EN 6063 T6 back plate: EN AW-1050A H14/H24
Finishes	- Unfinished for site painting - Primed for site painting - Pre-finished to RAL colour
Blind sizes	Blind Sizes to fit inside the box: SHY 85/60 ZIP 240v with 36mm hem bar Opening Width max: 1900mm Opening Length max: 2900mm Max area: 7.0m²
Installation	Boxes should be fixed on both sides. The finished plaster level should be flush with chamfered edge. Anchoring countersink screws through skim coat flanges are recommended.
Drawing	Standard Blindspace Boxes R110x130 for Rooflight Blinds
Item name	R110x130, R110x50
Date	October, 2017
Notes	Dimensions in mm Do not scale from drawing
Drawn by	M. Kozak, J. Dobosz
Approved	A. Sundelin
Revision	R-01 first issue R-02 third parties hardware update

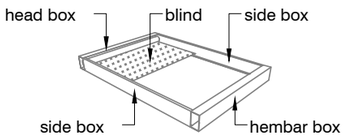

type — flange location

Blindspace R110x130 S

box front size — depth of the box

Frame Layout

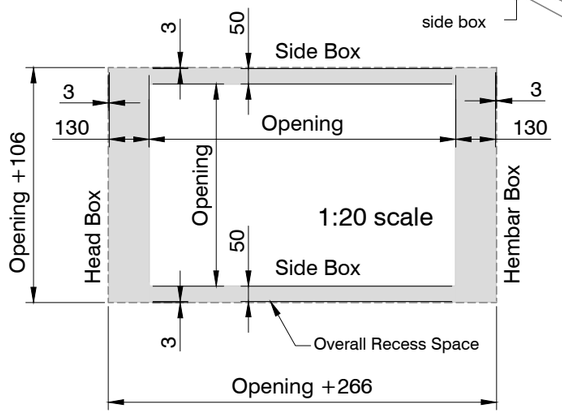

Sample Rooflight Aplication

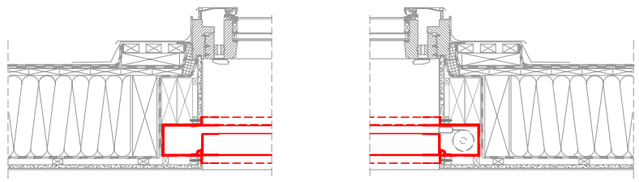

1:20 scale

Sample Installation Detail

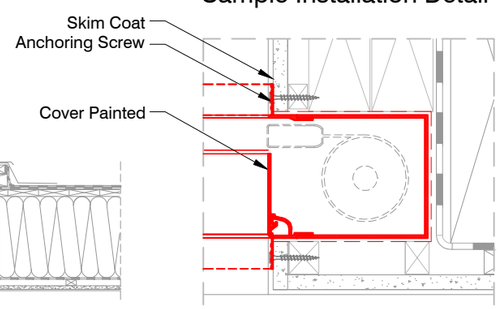

1:5 scale

Skim Coat Flanges
Location Options:

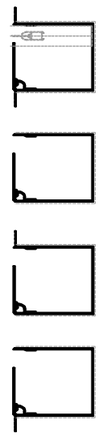

Standard - S

No Flange - N

Idle Corner Flange - I

Hinge Corner Flange - H

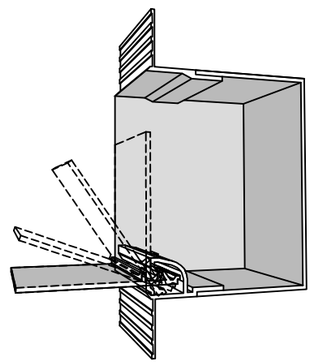

Print date	2017-10-20
Print file	blindspace r110x130 shy 85-60 zip 36 hem v13.dxf
Page size	ISO A3 420x297
Remarks	ZRE

BLINDSPACE

 Blindspace® is a registered trademark of Blindspace AB. Key features are protected by multiple patent applications.