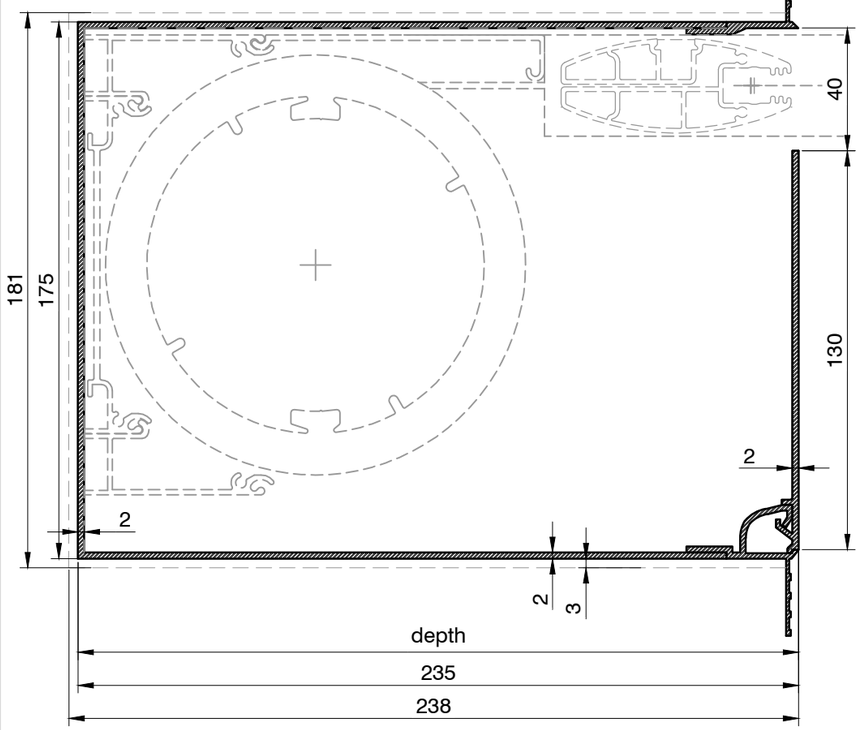

Head Box
R175x235 S

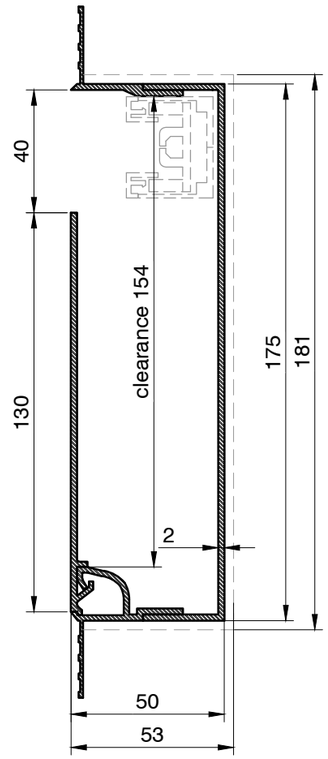

Side Box
R175x50 S

1:2 scale

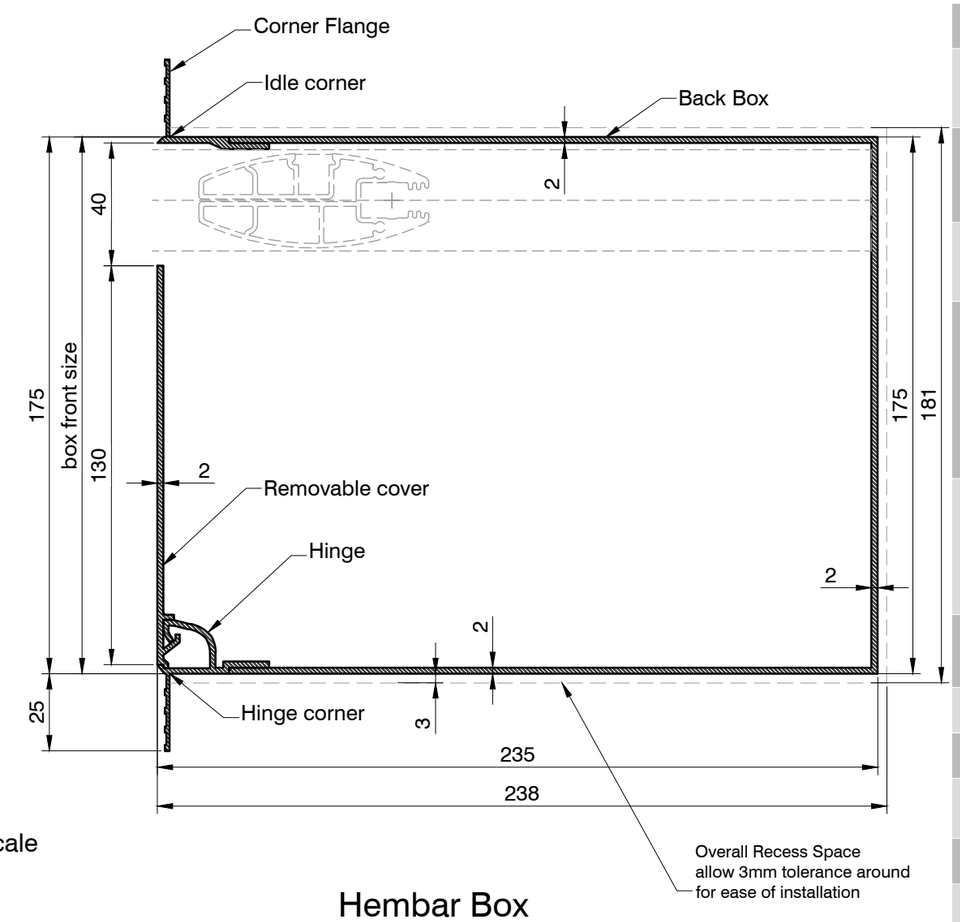

Hembar Box
R175x235 S

Product	Blindspace R175x235
Description	Recessed aluminium boxes and covers designed to conceal rooflights blinds.
Material	Anodized Aluminium, grade: front plate: EN 6063 T6 back plate: EN AW-1050A H14/H24
Finishes	- Unfinished for site painting - Primed for site painting - Pre-finished to RAL colour
Blind sizes	Blind Sizes to fit inside the box: SHY 150/110 ZIP 240v with 75mm hem bar FTS 4 visible wires Opening Width max: 4900mm Opening Length max: 5900mm Max area: 26.9m²
Installation	Boxes should be fixed on both sides. The finished plaster level should be flush with chamfered edge. Anchoring countersink screws through skim coat flanges are recommended.
Drawing	Standard Blindspace Boxes R175x235 for Rooflight Blinds
Item name	R175x235, R175x50
Date	October, 2017
Notes	Dimensions in mm Do not scale from drawing
Drawn by	M. Kozak, J. Dobosz
Approved	A. Sundelin
Revision	R-01 first issue

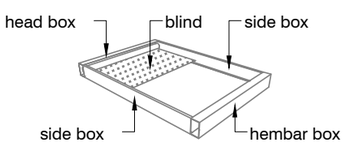

type — flange location

Blindspace R175x235 S

box front size — depth of the box

Frame Layout

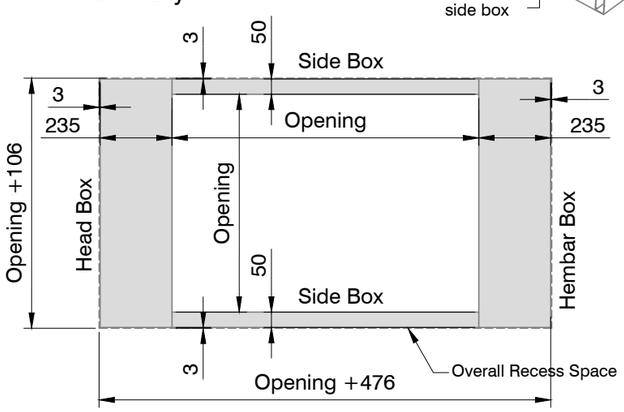

Sample Rooflight Aplication

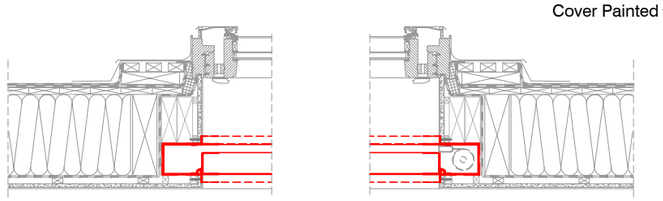

1:20 scale

Sample Installation Detail

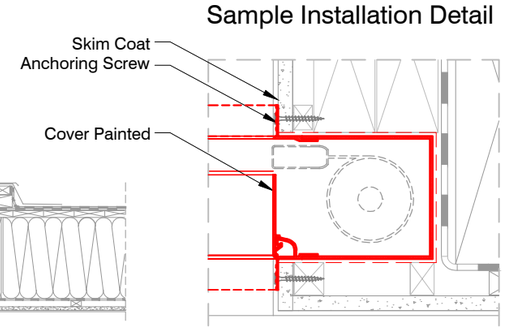

1:5 scale

Skim Coat Flanges Location Options:

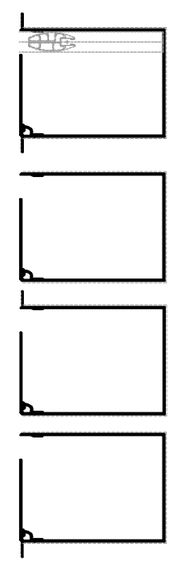

Standard - S

No Flange - N

Idle Corner Flange - I

Hinge Corner Flange - H

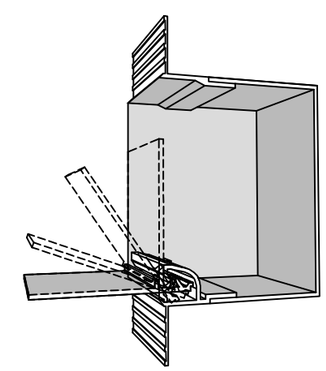

Print date	2017-10-18
Print file	blindspace r175x235 shy 150-110 zip 240v 75 hem fts 4 visible wires v05.dxf
Page size	ISO A3 420x297
Remarks	ZRE

BLINDSPACE

